TALCO FIRE SYSTEMS
RESIDENTIAL & COMMERCIAL FIRE PUMP SPECIALISTS
6040 NE 112TH AVE. PORTLAND, OR 97220
800-878-8055 WWW.TALCOFIRE.COM

LSF-500CIF

NFPA-13D Residential Package

Maximum Suction Pressure: 72PSI

System Specifications

Motor
-5 horsepower electric
-240 Volt, 21.5 Amp
-Single Phase
-3450 RPM

Pump
-High pressure cast iron volute
-Machined bronze impeller
-1½" Suction
-1¼" Discharge
-150 PSI Max Working Pressure

Discharge Manifold
-Check Valve
-Zero to 100 PSI pressure gauge
-40/60 pressure switch
-Isolation ball valve

Controls
-240 Volt
-Minimum run timer
-Pressure switch operated contactor
-HOA toggle switch (Hand, Off, Auto)

Dimensions (approximate)
-22 7/16" Length
-19½" Height
-14" Width
-135 pounds

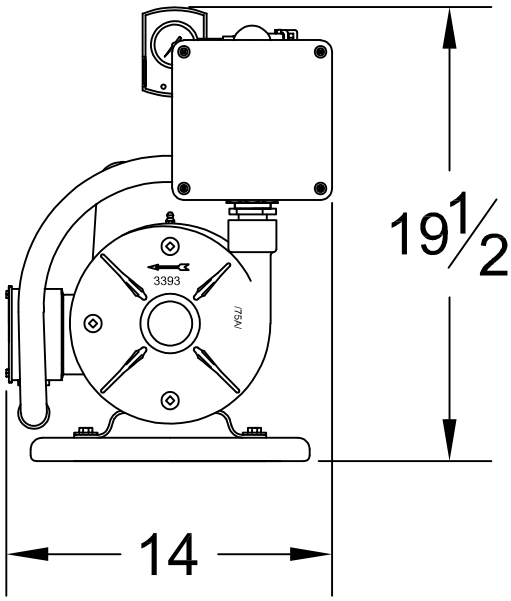

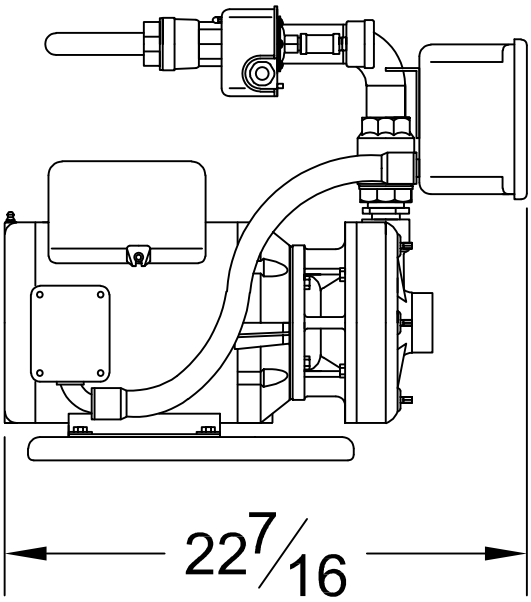

Performance

Performance values based on multiple pump tests. Not for certification purposes.

GPM	0	35	40	45	50	55	60	65
PSI	74	69	68	67	65	63	61	58

TALCO FIRE SYSTEMS
RESIDENTIAL & COMMERCIAL FIRE PUMP SPECIALISTS
6040 NE 112TH AVE. PORTLAND, OR 97220
800-878-8055 WWW.TALCOFIRE.COM

LSF-300C

NFPA-13D Residential Package

Maximum Suction Pressure: 63PSI

System Specifications

Motor
-3 Horsepower Electric
-240 Volt, 13 Amp
-Single Phase
-3450

Pump
-316 Series Stainless Steel Volute
-Stainless Steel Impeller
-1 ½" Suction
-1 ¼" Discharge
-125 PSI Max Working Pressure

Discharge Manifold
-Check Valve
-Zero to 100 PSI Pressure Gauge
-40/60 Pressure Switch
-Isolation Ball Valve

Controls
-240 Volt
-Minimum Run Timer
-Pressure Switch Operated Contactor
-HOA Toggle Switch (Hand, Off, Auto)

Dimensions (Approximate)
-23 ⅛" Length
-18 ½" Height
-12 ⅞" Width
-81 Pounds

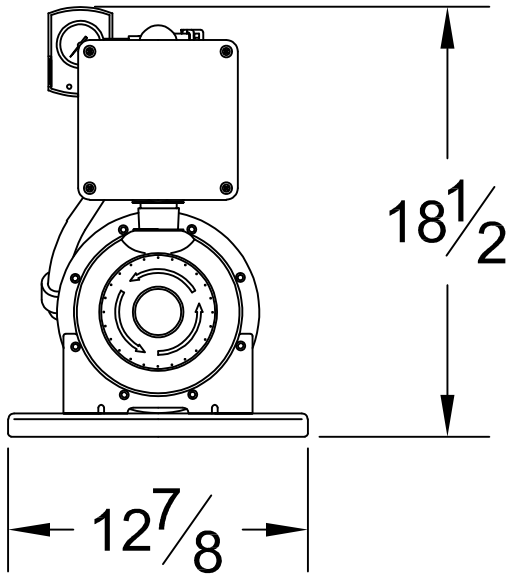

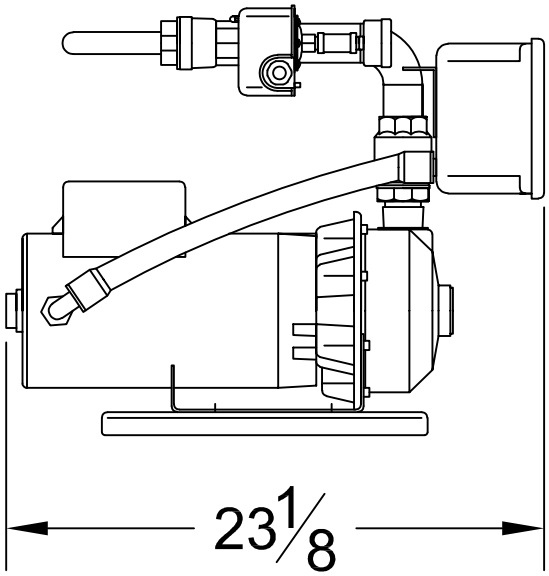

Performance

Performance values based on multiple pump tests. Not for certification purposes.

GPM	0	25	30	35	40	45	50	55
PSI	59	57	55	54	53	51	50	49

TALCO FIRE SYSTEMS

RESIDENTIAL & COMMERCIAL FIRE PUMP SPECIALISTS
6040 NE 112TH AVE. PORTLAND, OR 97220
800-878-8055 WWW.TALCOFIRE.COM

Residential Packaged Fire Pump System

HDR-100

Heavy Duty Residential Package
Design Condition: 100GPM @ 83PSI

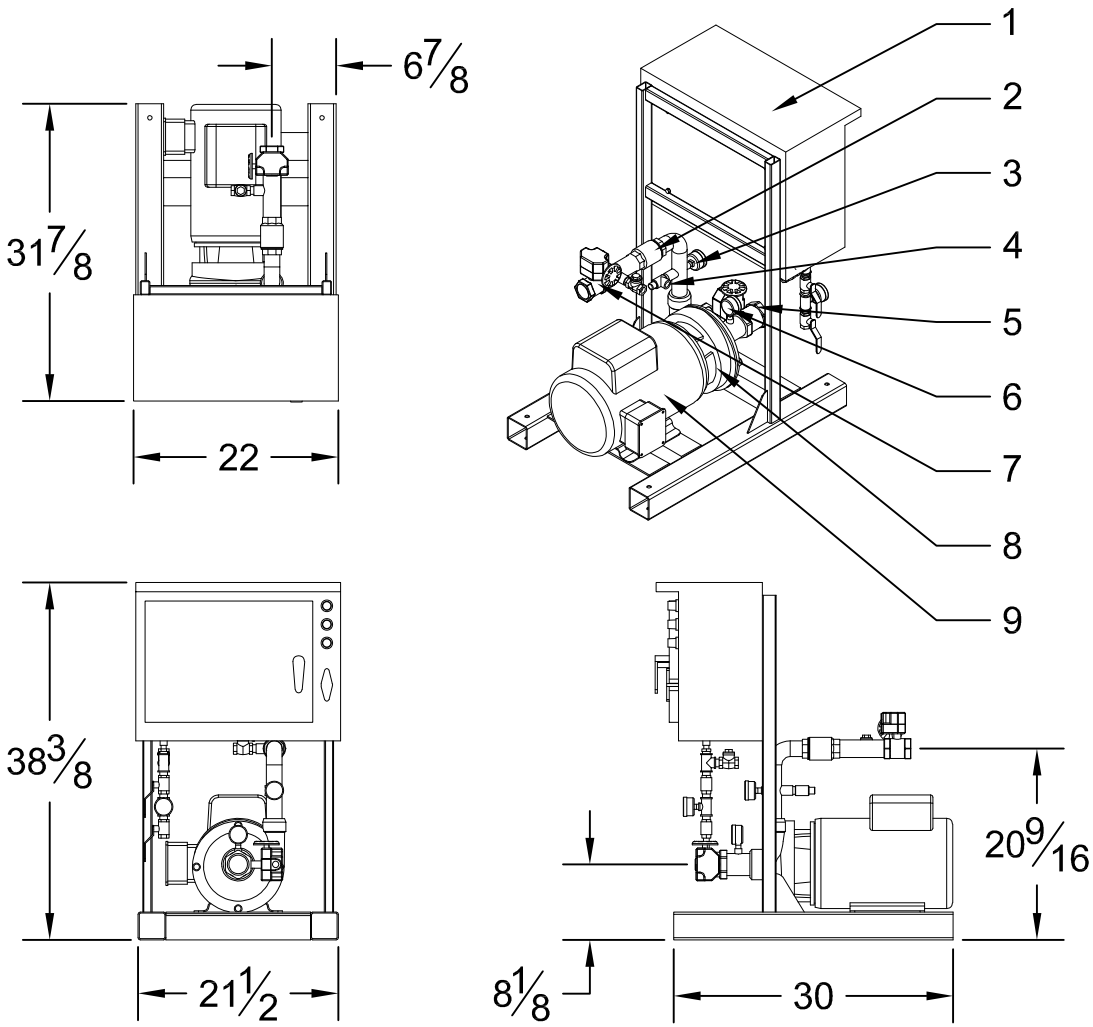

System Specifications:

Motor
- -10 Horsepower Electric
- -230 Volt
- -46 Amp
- -Single Phase
- -3450 RPM

Pump
- -End Suction Centrifugal Pump
- -2" Suction (NPT)
- -1 ½" Discharge (NPT)
- -175 PSI max working pressure

System Components
- -1- Residential Fire Pump Controller
- -2- Check Valve
- -3- Discharge Pressure Gauge
- -4- Case Relief Valve
- -5- Suction Monitored Butterfly Valve
- -6- Suction Pressure Gauge
- -7- Discharge Monitored Butterfly Valve
- -8- End Suction Pump
- -9- Electric Motor
- -Not Shown- Copper Sensing Line (per NFPA20)

Performance

Performance values based on multiple pump tests. Not for certification purposes.

GPM	0	25	50	75	100	125	150
PSI	98	96	94	90	83	72	60

Please Note: This fire pump system uses an unlisted pump & a residential controller. Please submit to your AHJ for approval prior to ordering.